## Model 244A, 244A-2 Automotive Impact Wrench Exploded Diagram

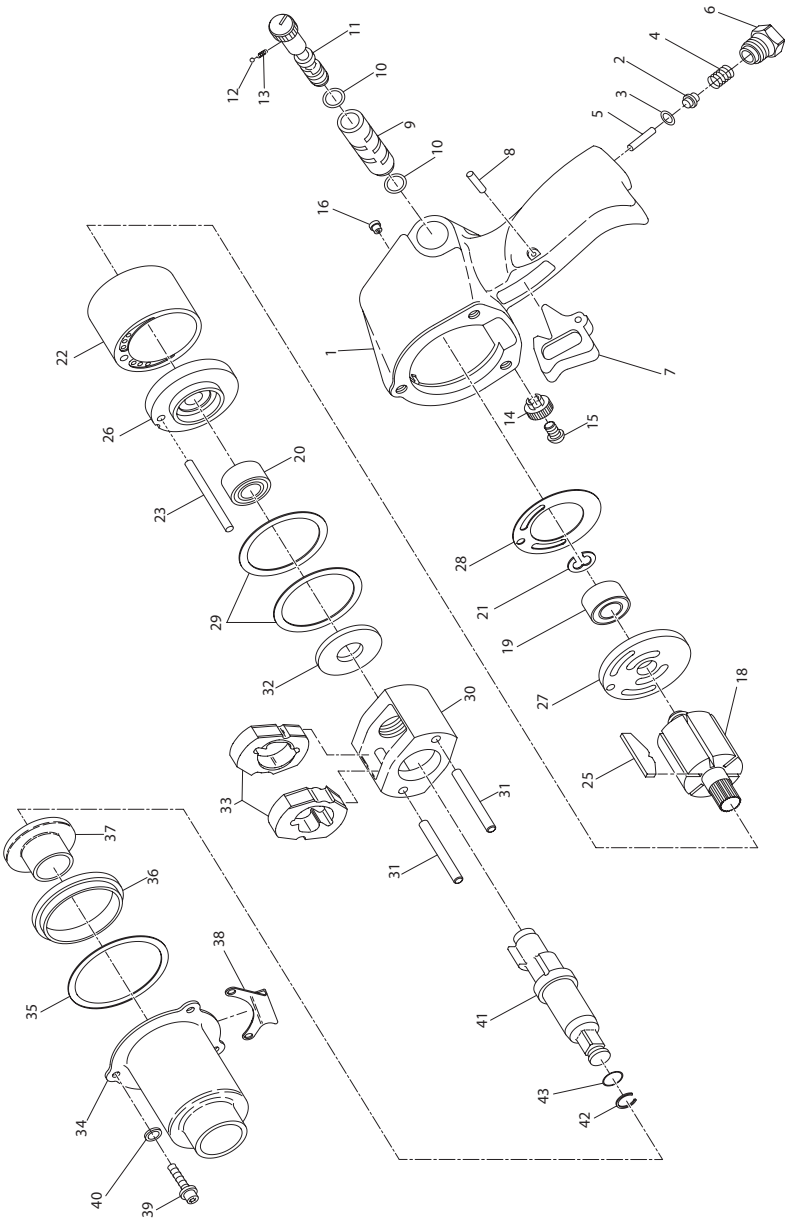


(Dwg. TPA1916)

## Model 244A, 244A-2 Automotive Impact Wrench Parts List

| Item | Part Description | Part Number | Item | Part Description | Part Number |
|---|---|---|---|---|---|
| 1 | Motor Housing Assembly | 244A-A40 | 28 | End Plate Gasket | PF800-283 |
| 2 | Throttle Valve Assembly | 404-50A | 29 | Motor Clamp Washer (2) | 227-207 |
| 3 | Throttle Valve Face | 405-159 | 30 | Hammer Frame Assembly | 231XP-A703 |
| 4 | Throttle Valve Spring | R1A-51 | 31 | Hammer Pin (2) | 231-704 |
| 5 | Throttle Valve Stem | 402-302 | 32 | Hammer Frame Rear Washer | 231-706 |
| 6 | Air Strainer Assembly | 402-565 | 33 | Hammer (2) | 231XP-724 |
| 7 | Trigger | 705-93 | 34 | Hammer Case Assembly | 131-A927 |
| 8 | Trigger Pin | 533-656 | 35 | Hammer Case Gasket | 230-36 |
| 9 | Reverse Valve Bushing | 231-A330 | 36 | Hammer Case Pilot | 405-800 |
| 10 | Reverse Valve Bushing Seal (2) | PS3-67 | 37 | Hammer Case Bushing | 705-941 |
| 11 | Reverse Valve | 231-329A | 38 | Exhaust Deflector | 244LG-23 |
| 12 | Reverse Valve Detent Ball | AV1-255 | 39 | Hammer Case Cap Screw (3) | 131-638 |
| 13 | Reverse Valve Detent Spring | 131-664 | 40 | Hammer Case Lock Washer (3) | 131-637 |
| 14 | Reverse Valve Knob | 131-666 | 41 | Anvil Assembly (1/2" Square Drive) | |
| 15 | Reverse Valve Knob Screw | 231-665 | | Standard Length | 231B-A626 |
| 16 | Grease Fitting | 131-188 | | 2" Extended Length | 231B-A414 |
| * | Housing Label | WARNING-2-99 | 42 | Socket Retainer | 2135-425 |
| * | Nameplate | 244A-301 | 43 | Retainer O-Ring | R1A-159 |
| 18 | Rotor | 244-53 | * | Grease Gun | R000A2-228 |
| 19 | Rear Rotor Bearing | 402-22 | * | Tune-Up Kit (includes items 3, 4, 10, 12, 13, 19, 20, 21, 25, 28, 35, 42, and 43) | 244-TK2 |
| 20 | Front Rotor Bearing | 4U-97 | | | |
| 21 | Rear Rotor Bearing Retainer | 131-118 | * | Hammer Kit (for 244A Standard Length) (includes items 20, 33(2), 35, 39(3), 40(3), and 41) | 231B-THK1 |
| 22 | Cylinder | 904-3 | | | |
| 23 | Cylinder Dowel | 230-98 | | | |
| 25 | Vane Packet (Set of 6 Vanes) | 2906P-42-6 | * | Hammer Kit (for 244A-2 Extended Length) (includes items 20, 33(2), 35, 39(3), 40(3), and 41) | 231B-THK2 |
| 26 | Front End Plate | 131-11 | | | |
| 27 | Rear End Plate | 131-12 | | | |

* Not Illustrated

## Parts and Maintenance

When the life of the tool has expired, it is recommended that the tool be disassembled, degreased and parts be separated by material so that they can be recycled.

Tool repair and maintenance should only be carried out by an authorized Service Center.

Refer all communications to the nearest **Ingersoll Rand** Office or Distributor.

## Related Documentation

For additional information refer to:
Air Impact Wrench Product Safety Information Manual 04580916.
Air Impact Wrench Product Information Manual 04584751.

Manuals can be downloaded from www.ingersollrandproducts.com


© 2011 **Ingersoll Rand**
**16578791**
Edition 2
May 2011